**AddStoris**
**Towel rack with towel rail**
Finish: **Polished Gold Optic** Article Number: **41751990**

## Description

**product features**

- wall-mounted
- material: metal
- holder material: plastic
- length: 648 mm
- with mounting material
- concealed fastening
- drilling distance: 626 mm
- diameter drill hole: 6 mm

## Design awards

DESIGN AWARD 2021

reddot winner 2021

## Product image

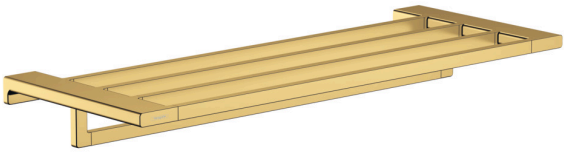
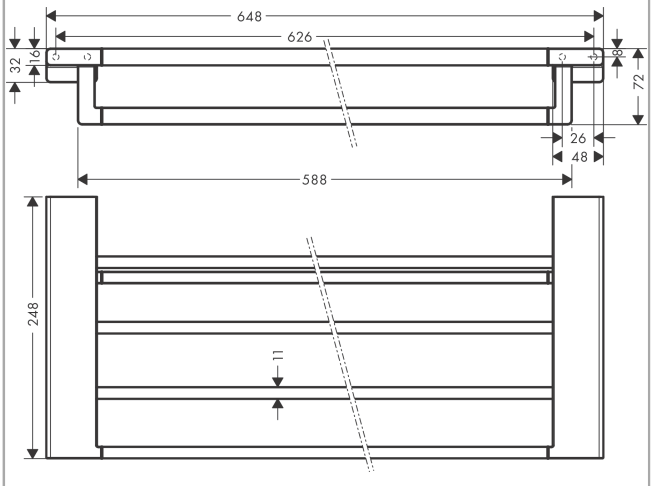
## Scale drawing