hansgrohe

Aquno Select M81
Single lever kitchen mixer 170, pull-out spout, 3 jet, sBox
Finish: **Matt Black** Article Number: **73831673**

Description

product features

- consists of: single lever kitchen mixer, hose box, multifunctional strainer
- ComfortZone 170
- swivel range adjustable in 3 steps 60°, 110° or 150°
- laminar spray and shower spray, SatinFlow
- change between SatinFlow and pull-out spray at the touch of a button
- lockable shower spray, spray returns through pressing spray diverter
- MagFit magnetic shower support
- connection dimension: DN15
- ceramic cartridge
- connection type: G ⅜ connections
- integrated non-return valve
- not suitable for continuous flow water heaters
- sBox for quiet, smooth and protected hose guidance in the cabinet, under the countertop
- tap hole with Ø 35 mm required, recommendation: the middle of tap hole drilling should be max. 50 mm from the back side of of the bowl

Technology

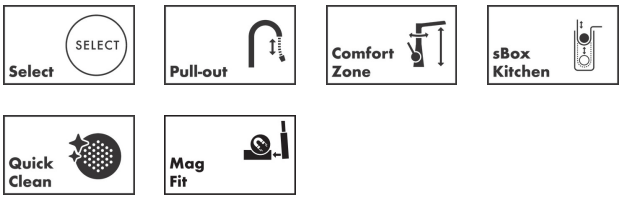

Design awards

reddot winner 2020
best of the best

Product image
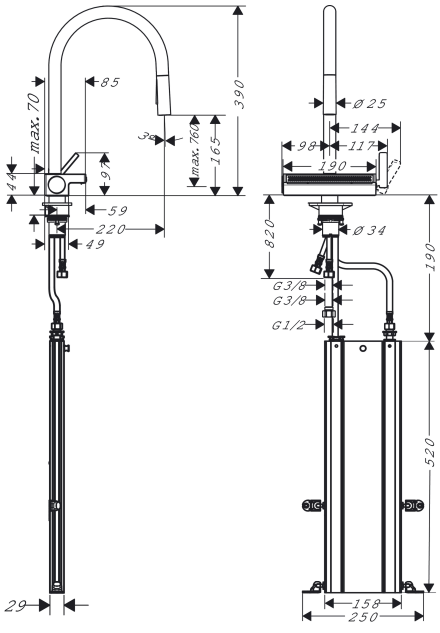
Scale drawing