S51
S510-F450 Built-in sink 450
Finish: **Graphiteblack** Article Number: **43312170**

Description

product features

- cut-out dimensions: 540 x 490 mm
- material: SilicaTec
- number of bowls: 1 main bowl
- tap hole for drilling is predefined (see scale drawing), diamond drill included
- cabinet size: 60 cm
- installation type: topmount
- position overflow: on the right side of the bowl
- sink depth: 190 mm
- waste set not included - please order one waste set from the required parts
- sink wall thickness: 7 mm
- diameter drain hole: 90 mm

Product image
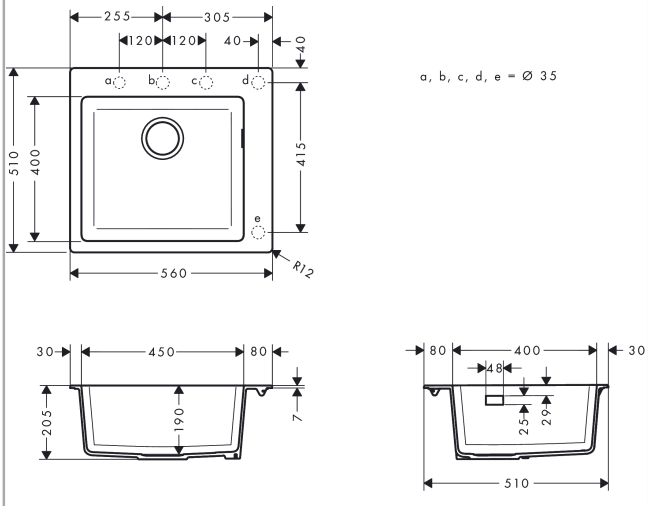
Scale drawing