AddStoris
Towel rack with towel rail
Finish: **Matt Black** Article Number: **41751670**

Description

product features

- wall-mounted
- material: metal
- holder material: plastic
- length: 648 mm
- with mounting material
- concealed fastening
- drilling distance: 626 mm
- diameter drill hole: 6 mm

Design awards

DESIGN AWARD 2021

reddot winner 2021

Product image

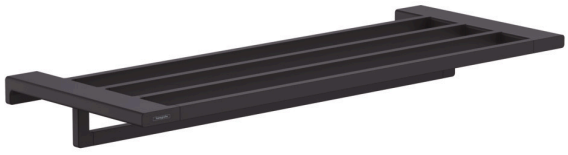
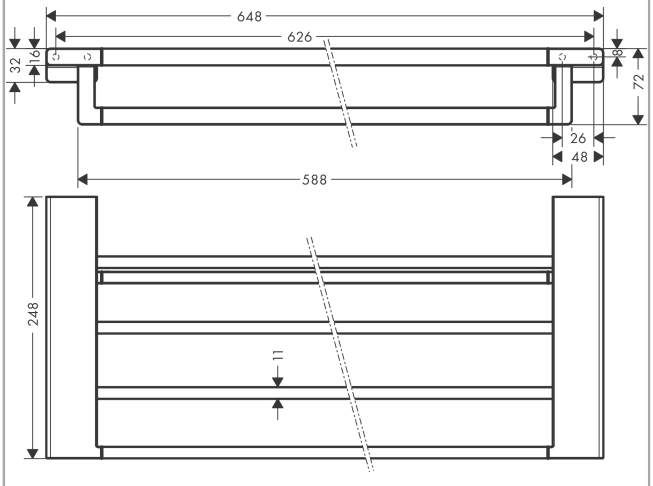
Scale drawing